Journal of Air Transport Management xxx (2017) 1–11

Contents lists available at ScienceDirect

Journal of Air Transport Management

journal homepage: www.elsevier.com/locate/jairtraman

Fuzzy AHP approach to passenger aircraft type selection

Slavica Dožić [a, *], Tatjana Lutovac [b], Milica Kalić [a]

[a] University of Belgrade, Faculty of Transport and Traffic Engineering, 305 Vojvode Stepe, Belgrade, Serbia
[b] University of Belgrade, School of Electrical Engineering, 73 Bulevar Kralja Aleksandra, Belgrade, Serbia

ARTICLE INFO

Article history:
Received 8 February 2017
Received in revised form
16 July 2017
Accepted 23 August 2017
Available online xxx

Keywords:
Fuzzy AHP
Logarithmic fuzzy preference programming
Aircraft type selection

ABSTRACT

In order to choose an aircraft to operate a defined set of routes, an airline needs to consider passenger's interests in addition to its own interests. The goal of the paper is to propose a methodology which will help choose aircraft type(s) that meets the market conditions and airline's requirements best for known route network and known forecasted air travel demand by routes. Although this is a multi-criteria problem, planners usually have to make decisions under uncertainty, incorporating vagueness of human thinking. Therefore, we proposed the Fuzzy Analytic Hierarchy Process (FAHP) based approach. To derive crisp priorities from fuzzy pairwise comparison matrices, a logarithmic fuzzy preference programming (LFPP) method is employed, as well as an improved LFPP method. With regard to different criteria that involve quantitative and qualitative aspects, three criteria and ten sub-criteria are selected. Experts from different airlines and universities responded to an interview, contributing to the design of pairwise comparison matrices for the criteria and sub-criteria. The regional airline case study is used to show the applicability of the methodology proposed.

© 2017 Elsevier Ltd. All rights reserved.

1. Introduction

Planners in an airline are repeatedly faced with different decision making. Some decisions are easy to make, while others involve numerous alternatives as well as objectives. Multi-criteria decision making (MCDM) methods endeavour to help decision makers choose a satisfactory solution. In order to retain or even to strengthen the existing position in the constantly changing market, it is not sufficient to consider traditional single-criterion models oriented towards cost minimization or profit maximization. Nowadays, airlines need to consider both passengers' and its own interests and also, to satisfy different operational requirements. They are forced to improve their level of service which can be understood differently, depending on the perspective. From the passengers' point of view, level of service could involve an appropriate offer in terms of high frequencies, desired time of operations, attractive and comfortable aircraft. An aircraft with low operating costs which can be ordered under favourable payment conditions, placed on the fleet at the right time, and which will operate highly loaded is desired from an airline's point of view. It is necessary to consider many different factors, such as aircraft economies, commonality, aircraft performances, finance, market evaluation, etc. Some of these aspects are quantitatively expressed, while the others are described qualitatively. In order to harmonize these often conflicting aspects as well as to harmonize air travel demand and its capacity, an airline needs to adopt an appropriate methodological approach for fleet selection process that reflects its policy.

The main objective of this paper is to propose a new methodology for aircraft type selection problem. Bearing in mind that this problem is the inherent multi-criteria decision making, we propose the Fuzzy Analytic Hierarchy Process (FAHP) as an effective solution. This method has found significant and successful applications in different fields, which has motivated the authors to employ it to help airline planners when choosing appropriate aircraft type. Also, the choice of MCDM method that will be applied sometimes is determined on the basis of the data availability. Precisely, some techniques require the specific data; some of them need pairwise comparison of the data, while FAHP can use imprecise pairwise comparisons. Although airline planners in charge of fleet planning usually cannot precisely express criteria importance over each other and have to deal with uncertainty, there is a possibility to use fuzzy numbers. In order to derive crisp priorities from fuzzy pairwise comparison matrices, a logarithmic fuzzy preference programming (LFPP) method (Wang and Chin, 2011) is used in this paper, and an improvement of the LFPP is proposed.

The contribution of the paper could be perceived through two

* Corresponding author.
E-mail addresses: s.dozic@sf.bg.ac.rs (S. Dožić), tlutovac@eunet.rs (T. Lutovac), m.kalic@sf.bg.ac.rs (M. Kalić).

http://dx.doi.org/10.1016/j.jairtraman.2017.08.003
0969-6997/© 2017 Elsevier Ltd. All rights reserved.

main issues: the first one is related to the selection criteria used as model input, which is of crucial importance for decision making and modelling, while the second one refers to the MCDM technique. Based on the analysis of the relevant literature, criteria used in the decision making process of aircraft type selection are identified. Moreover, the set of the most relevant criteria and sub-criteria which is necessary, in our opinion, for research like this, is proposed. Also, the contribution of the paper is the proposed methodology for a known aircraft type selection problem based on the one of the newer LFPP methods for the first time, as well as the improvement of the LFPP.

Besides, the valuable airline experts' knowledge is incorporated into the methodology through the pairwise comparisons of criteria proposed. The goal of the paper is to propose a methodology for selection of aircraft type(s) that meets the market condition and the airline's requirements best for a known route network and air travel demand by routes. Based on the proposed sets of criteria and sub-criteria (both quantitative and qualitative) and encompassing airlines' as well as passengers' interests, the aircraft type should be chosen from the defined set of aircraft.

After the introduction and literature review, the LFPP based method and FAHP are presented, and improvement of LFPP is introduced. The appropriate criteria and sub-criteria are proposed and fuzzy pairwise matrices are created based on experts' knowledge. The problem of aircraft type selection is solved based on the regional airline case study. The solution is discussed and followed by concluding remarks.

2. Literature review

In this section, we will briefly review the relevant literature and related work.

2.1. Fleet planning and the aircraft type selection problem

In the academic literature, aircraft type selection is considered in different ways. Bharda (2003) establishes the relationship between selection of an aircraft and passenger demand and answers the question: Is it possible to derive the selection of aircraft and fleet mix for origin and destination pairs based on the passenger demand on considered destinations? He reveals that passengers, distance and types of airport hubs can support selection of an aircraft fairly well. See et al. (2004) apply multi-attribute decision making based on hypothetical equivalents and inequivalents to launch a fleet with one type of aircraft (in order to reduce operating costs) to serve the routes on major cities among Asia Pacific countries and the United States. Harasani (2006, 2008) presents a model for aircraft selection in the case of a Saudi Arabia airline operating on domestic and international routes with the base in Jeddah (Harasani, 2006) and Madniah (Harasani, 2008). The study chooses specific aircraft types for consideration on aircraft range and payload for a given route network. Aircraft efficiency and its contribution to the net profit of the airline are obtained as a result from the Excel application created to help planners choose the right aircraft. A systematic evaluation model to help Air Force Academy with selection of an optimal training aircraft (from the perspective of pilot drillmasters and trainees) is proposed by Wang and Chang (2007). The authors employ a MCDM method to determine the importance weights of evaluation criteria, and TOPSIS to obtain performance ratings of feasible alternatives in linguistic terms described by triangular fuzzy numbers. Yeh and Chang (2009) introduce a new fuzzy group MCDM approach to the aircraft selection problem faced by Taiwan's domestic airline for its major routes. Three MCDM methods are used by Sun et al. (2011) to solve an aircraft concept selection problem for a hypothetical airline when considering the robustness of the decision. The robustness is introduced in order to accommodate uncertainties resulting from changing of fuel price and load factor. The Analytic Network Process (ANP) is utilized by Ozdemir et al. (2011) in order to choose middle range, single-aisle aircraft for Turkish Airlines. Gomes et al. (2012) use the multi-criteria decision aiding method NAIADE (Novel Approach to Imprecise Assessment and Decision Environments) to select an aircraft for regional chartering in Brazil. Khoo and Teoh (2014) consider stochastic demand and propose a new methodology to find the optimal solution for fleet management decision model. Fleet management, according to them, determines the optimal number of aircraft that an airline needs to keep its level of service and maximize the profit. Dožić and Kalić (2015a) propose a three stage airline fleet planning model. Passenger demand and distance are used as inputs to the first stage based on the fuzzy logic system in order to get an approximate fleet mix in terms of aircraft size (small or medium-size). The outputs are different sets of routes: one set represents the routes covered by small aircraft and the other one represent routes covered by medium-size aircraft. By splitting the set of planned flights into subsets, the problem converts into two independent fleet sizing problems solved by a heuristic algorithm. They extend their research to aircraft type selection as the last stage and suggest the even swap method (Dožić and Kalić, 2015a) and AHP (Dožić and Kalić, 2014) as possible tools to choose appropriate fleet. Bruno et al. (2015) use the hybrid approach based on AHP and fuzzy set theory in the final ranking of alternatives to support aircraft evaluation.

Research papers that apply MCDM methods as well as aspects that are considered in the process of aircraft type selection are summarized in Table 1. The authors use different criteria/sub-criteria to support the appropriate aircraft type selection. Depending on their educational background, terminology could be different. Considering criteria/sub-criteria presented in the literature we propose five aspects (Table 1) that could encompass all criteria: *Technical/Technological, Economic, Passengers' (quality of service), Environmental* and *Other aspects*. *Technical/Technological aspects* involve criteria related to aircraft and airport characteristics, as well as aircraft performances. These aspects are considered in each paper that treats aircraft type selection. *Economic aspects* include all criteria that are measured in monetary units. In most cases, these aspects are related to different categories of costs, and also are very often used. *Passengers' aspects* refer to the quality of service and could comprise of various criteria important for passengers. *Environmental aspects* are becoming more popular in recent years due to the fact that pollution is a serious problem for the humanity. Therefore, environmental protection forces aircraft manufacturers to produce a new generation of aircraft that are fuel efficient, with low level of emissions and noise. Accordingly, it is not surprising that small number of researchers consider environmental aspects. Criteria that could not be considered from the previous four aspects are assigned to the *Other aspects*.

It also should be mentioned that a wide variety of problems in aviation are recently solved by using MCDM methods. Researcher employed different MCDM methods to find the optimal freight bundling configurations (Rezaei et al., 2017), to select airline service quality improvement criteria (Chen, 2016), to enable airlines to identify human errors and select an intervention strategy (Chen et al., 2017), to mitigate airport congestion (Bongo and Ocampo, 2017), to select a new routes between specific regions (Deveci et al., 2017).

2.2. The Fuzzy Analytic Hierarchy Process (FAHP) application

The Analytic Hierarchy Process (AHP) introduced and developed

Please cite this article in press as: Dožić, S., et al., Fuzzy AHP approach to passenger aircraft type selection, Journal of Air Transport Management (2017), http://dx.doi.org/10.1016/j.jairtraman.2017.08.003

Table 1
Different aspects in aircraft type selection discussed in the papers that apply MCDM methods.

Authors	Technical/Technological aspects	Economic aspects	Passengers' aspects (quality of service)	Environmental aspects	Other
Yeh and Chang (2009)	Maintenance requirements Pilot adaptability Aircraft reliability Max range	Operations productivity Airline fleet economy of scale Purchasing price DOC	Passenger preference	Noise level	Consistency with corporate strategy
Sun et al. (2011)	Max cruise speed Maximum take-off mass Fuel consumption per seat mile Available seat mile[a]		Cabin volume per passenger		Robustness
Ozdemir et al. (2011)	Dimensions Security Useful life of the aircraft Aircraft reliability	Purchasing cost Operation and spare cost Maintenance cost Salvage cost	Suitability for service quality		Delivery Time
Gomes et al. (2012)	Range Flexibility Cruising speed Replacement parts availability Landing and take-off distance	Acquisition cost Liquidity cost Operating cost	Comfort Avionics availability Safety		
Dožić and Kalić (2014), Dožić and Kalić (2015b)	Maximum take-off mass Seat capacity Total baggage capacity	Price of aircraft Total cost per available seat miles			Payment condition
Dožić and Kalić (2015a)	Maximum take-off mass Aircraft seat capacity	Price of aircraft Unit trip cost	Luggage per passenger		
Bruno et al. (2015)	Speed Autonomy	Aircraft price Operative costs/range*seats	Seat comfort Cabin luggage compartment size	Pollution Noise	

[a] Available seat mile (ASM) - is a measure of airline output. It represents one seat flown one mile (Holloway, 2008).

by Saaty (1980) has been widely used in multi-criteria decision making. This method uses both quantitative and qualitative data (that are translated into numbers). The AHP is a theory of measurement through pairwise comparisons. The pairwise comparison method is used to compare alternatives and determine their importance over each other. The comparisons are made using a scale of absolute judgements that represents the domination measure of one element over another with respect to a given attribute. Dealing with uncertain judgements to express the criteria importance over each other indicates the possibility to use fuzzy sets or fuzzy numbers, which incorporates the vagueness of human thinking. In order to incorporate fuzziness in multi criteria decision making, many authors explored fuzzy AHP (FAHP).

Van Laarhoven and Pedrycz (1983) were the first researchers to introduce the application of fuzzy logic principle to AHP. They propose a fuzzy logarithmic least square method to obtain triangular fuzzy weights from triangular fuzzy pairwise comparison matrices. Buckley (1985) employs the geometric mean method to determine fuzzy weights for each fuzzy matrix, as well as to find out final fuzzy weights for the alternatives. Chang (1996) introduces the use of triangular fuzzy numbers for the pairwise comparison scale of FAHP. He suggests an extent analysis method, which derives crisp weights of alternative from fuzzy pairwise comparison matrices. Because of its simplicity, Chang's extent analysis method has been used by researchers in many areas until Wang et al. (2008) demonstrated that the priority vectors determined by the extent analysis method in FAHP problems did not represent the relative importance of decision criteria or alternatives and may have led to a wrong decision. Mikhailov (2003) proposes two methods to derive crisp priorities from fuzzy pairwise comparison judgments based on fuzzy preference programming, but he does not consider nonlinearity of the fuzzy reciprocal numbers. Rezaei et al. (2013) suggests an improvement of fuzzy preference programming that can correct this drawback. Wang and Chin (2011) propose a logarithmic fuzzy preference programming (LFPP) method for the FAHP priority derivation. The priorities of fuzzy pairwise comparison matrices are formulated as a logarithmic nonlinear programming and crisp priorities are derived from fuzzy pairwise comparison matrices. Therefore, it was decided to use LFPP method for the FAHP priority derivation. Bearing in mind that LFPP is based on Mikhailov (2003) method, the same drawback related to nonlinearity is observed. Hence, the LFPP improved in the similar way as Rezaei et al. (2013) proposed, is introduced in this paper.

The FAHP method was used for selecting a cruise port of call location (Wang et al., 2014). Tan et al. (2014) employ FAHP for selecting problems in process engineering involving both quantitative and qualitative aspects. Mandic et al. (2014) analyse of the financial parameters of Serbian banks by applying the fuzzy AHP and TOPSIS methods. Wu et al. (2013) use FAHP to resolve the uncertainty and imprecision in the evaluation of airlines' competitiveness. They establish an index system with five first-order and 17 s-order indicators, propose a Chinese aviation competitiveness model based on FAHP, and evaluate the competitiveness of five major Chinese airlines. Kilic et al. (2014) develope a hybrid methodology for enterprise resource planning (ERP) systems, based on FAHP and TOPSIS in the case of Turkish Airlines. Rezaei et al. (2013) use an improved fuzzy preference programming to evaluate entrepreneurship orientation. Conjunctive screening method and FAHP are used for the

Table 2
Triangular fuzzy conversion scale for pair of elements *i* and *j*.

Linguistic scale	Triangular fuzzy scale	Triangular fuzzy reciprocal scale
Just equal	(1, 1, 1)	(1, 1, 1)
Equally important	(1/2, 1, 3/2)	(2/3, 1, 2)
Weakly important	(1, 3/2, 2)	(1/2, 2/3, 1)
Strongly important	(3/2, 2, 5/2)	(2/5, 1/2, 2/3)
Very strongly important	(2, 5/2, 3)	(1/3, 2/5, 1/2)
Extremely preferred	(5/2, 3, 7/2)	(2/7, 1/3, 2/5)

Please cite this article in press as: Dožić, S., et al., Fuzzy AHP approach to passenger aircraft type selection, Journal of Air Transport Management (2017), http://dx.doi.org/10.1016/j.jairtraman.2017.08.003

problem of supplier selection in the airline retail industry by Rezaei et al. (2014). Li et al. (2017) propose a hybrid approach based on fuzzy AHP and 2-tuple fuzzy linguistic method to evaluate in-flight service quality in order to better understand the passengers' preference and obtain their perception for service quality.

The FAHP proves to be a very useful method that has found considerable applications in different fields, in spite of criticisms in recent years (Wang and Elhag, 2006; Wang et al., 2008; Zhü, 2014). Kubler et al. (2016) analyse 190 research papers (excluding doctoral dissertations, master's theses, textbooks, conference proceeding papers, and unpublished papers) published in the last decade (starting from 2004) that applied FAHP method to a wide range of problems. According to their findings, approximately 40 papers are published in 2014 and near the same number in 2015, while almost 20 papers are published in the first half of 2016. Therefore, they applied the rule: *"the more recent the year, the higher the number of papers reviewed"*. Also, 57% of the paper reviewed is related to the selection and evaluation problem, which is the theme of our paper. These facts support our decision to employ FAHP for the aircraft type selection problem.

Besides the fact that FAHP has successful application in different fields, it can be seen, in view of the cited literature, that FAHP and LFPP have not been used for solving aircraft type selection problem yet. Bearing in mind that aircraft type(s) selection implies multi criteria decision-making related to some uncertainty which is a product of human thinking, the authors decided to employ FAHP in this paper.

3. The LFPP method

Taking into consideration many different ways to derive priorities from the fuzzy pairwise comparison matrix, one of the newer methodologies, the logarithmic fuzzy preference programming method (Wang and Chin, 2011) is applied in this paper. Table 2 shows the conversion of linguistic scale into the triangular fuzzy scale.

The pairwise comparison matrix is filled out with the fuzzy judgements instead of precise judgments. Fuzzy judgements reflect the vagueness and imprecision of human thought related to the problem considered. When comparing two criteria, i and j, the exact numerical ratio a_{ij} can be approximated with a fuzzy ratio "about a_{ij}", which is represented by a fuzzy number $\tilde{a}_{ij}$. It means that criterion i is between l_{ij} and u_{ij} times as important as criterion j with m_{ij} being the most likely times. Therefore the fuzzy pairwise comparison matrix is given by (1):

$$\tilde{A} = (\tilde{a}_{ij})_{n\times n} = \begin{bmatrix} (1,\ 1,\ 1) & (l_{12}, m_{12}, u_{12}) & \cdots & (l_{1n}, m_{1n}, u_{1n}) \\ (l_{21}, m_{21}, u_{21}) & (1,\ 1,\ 1) & \cdots & (l_{2n}, m_{2n}, u_{2n}) \\ \vdots & \vdots & \vdots & \vdots \\ (l_{n1}, m_{n1}, u_{n1}) & (l_{n2}, m_{n2}, u_{n2}) & \cdots & (1,\ 1,\ 1) \end{bmatrix} \quad (1)$$

The elements of the matrix $\tilde{A}$ satisfy the reciprocal property, which means that $l_{ij} = 1/u_{ji}$, $m_{ij} = 1/m_{ji}$, $u_{ij} = 1/l_{ji}$ and $0 < l_{ij} \le m_{ij} \le u_{ij}$ for all $i, j = 1, \ldots, n$; $j \neq i$.

Once the matrix is built, it is possible to compute the crisp priority vector using the LFPP method proposed by Wang and Chin (2011). They take logarithm values of fuzzy judgment $\tilde{a}_{ij}$ from matrix $\tilde{A}$ by the approximate equation (2):

$$\ln\tilde{a}_{ij} \approx (\ln l_{ij},\ \ln m_{ij},\ \ln u_{ij}),\ i,j = 1,\ \ldots,\ n. \quad (2)$$

The logarithm of a triangular fuzzy judgment $\tilde{a}_{ij}$ can be seen as an approximate triangular fuzzy number, whose membership function can be defined by (3):

$$\mu_{ij}\left(\ln\left(\frac{w_i}{w_j}\right)\right) = \begin{cases} \dfrac{\ln(w_i/w_j) - \ln l_{ij}}{\ln m_{ij} - \ln l_{ij}}, & \ln\left(\dfrac{w_i}{w_j}\right) \le \ln m_{ij} \\ \dfrac{\ln u_{ij} - \ln(w_i/w_j)}{\ln u_{ij} - \ln m_{ij}}, & \ln\left(\dfrac{w_i}{w_j}\right) \ge \ln m_{ij} \end{cases} \quad (3)$$

where $\mu_{ij}(\ln(w_i/w_j))$ is the membership degree of $\ln(w_i/w_j)$ belonging to the approximate triangular fuzzy judgment $\ln\tilde{a}_{ij} = (\ln l_{ij},\ \ln m_{ij},\ \ln u_{ij})$, and w_i are crisp values of the priority vector. A crisp priority vector would be found to maximize the minimum membership degree $\lambda = \min\{\mu_{ij}(\ln(w_i/w_j)) | i = 1, \ldots, n-1; j = i+1, \ldots, n\}$. The resultant model can be defined by (4) or (5):

$$\max \lambda$$

$$\text{Subject to} \begin{cases} \mu_{ij}(\ln(w_i/w_j)) \ge \lambda, & i = 1, \ldots, n-1; j = i+1, \ldots, n \\ w_i \ge 0, & i = 1, \ldots, n \end{cases} \quad (4)$$

$$\max 1 - \lambda$$

$$\text{Subject to} \begin{cases} \ln w_i - \ln w_j - \lambda \ln(m_{ij}/l_{ij}) \ge \ln l_{ij}, & i = 1,\ \ldots, n-1; j = i+1, \ldots, n \\ -\ln w_i + \ln w_j - \lambda \ln(u_{ij}/m_{ij}) \ge -\ln u_{ij}, & i = 1,\ \ldots, n-1; j = i+1, \ldots, n \\ w_i \ge 0, & i = 1,\ \ldots, n \end{cases} \quad (5)$$

The nonnegative deviation variables δ_{ij} and η_{ij} ($i = 1, \ldots, n-1$; $j = i+1, \ldots, n$) are introduced in order to avoid membership degree λ from taking a negative value such that the inequalities (6) and (7) are satisfied:

$$\ln w_i - \ln w_j - \lambda \ln(m_{ij}/l_{ij}) + \delta_{ij} \ge \ln l_{ij},\ i = 1,\ \ldots, n-1;\ j = i+1, \ldots, n, \quad (6)$$

$$-\ln w_i + \ln w_j - \lambda \ln(u_{ij}/m_{ij}) + \eta_{ij} \ge -\ln u_{ij},\ i = 1,\ \ldots, n-1;\ j = i+1, \ldots, n. \quad (7)$$

It is the most preferable that the values of the deviation variables are as small as possible. Therefore, the following LFPP-based nonlinear priority model for the FAHP weight derivation is proposed and given by (8) and (9):

$$\text{Minimize } J = (1-\lambda)^2 + M\sum_{i=1}^{n-1}\sum_{j=i+1}^{n}\left(\delta_{ij}^{*}2 + \eta_{ij}^{*}2\right) \quad (8)$$

Subject to

$$\begin{cases} x_i - x_j - \lambda \ln\left(\dfrac{m_{ij}}{l_{ij}}\right) + \delta_{ij} \geq \ln l_{ij}, & i = 1, \ldots, n-1;\ j = i+1, \ldots, n \\ -x_i + x_j - \lambda \ln\left(\dfrac{u_{ij}}{m_{ij}}\right) + \eta_{ij} \geq -\ln u_{ij}, & i = 1, \ldots, n-1;\ j = i+1, \ldots, n \\ \lambda,\ x_i \geq 0, & i = 1, \ldots, n \\ \delta_{ij},\ \eta_{ij} \geq 0, & i = 1, \ldots, n-1;\ j = i+1, \ldots, n \end{cases} \tag{9}$$

Let x_i^*, $i = 1, \ldots, n$, be the optimal solution to the model proposed (8, 9). The normalized crisp priorities for fuzzy pairwise comparison matrix $\tilde{A} = (\tilde{a}_{ij})_{n\times n}$ can then be obtained as:

$$w_i^* = \frac{e^{x_i^*}}{\sum_{j=1}^{n} e^{x_j^*}},\ i = 1, \ldots, n \tag{10}$$

Wang and Chin (2011) prove that the LFPP method produces the unique normalized optimal priority vector for any fuzzy pairwise comparison matrix. According to these authors the value of δ^* ($\delta^* = \sum_{i=1}^{n-1}\sum_{j=i+1}^{n}(\delta_{ij}^* 2 + \eta_{ij}^* 2) = 0$) can be treated as an inconsistency measure for fuzzy pairwise comparison matrices. The bigger is the value of δ^*, the stronger the inconsistency among the fuzzy judgments. It is also preferable that a positive optimal value can be achieved for λ. If its optimal value λ^* is equal to 0, then there exists a strong inconsistency among the fuzzy judgments unless the value of δ^* is equal to 0.

3.1. Improved LFPP method

In the FAHP approach described above, we use two types of fuzzy numbers for criteria comparison. The first one are triangular fuzzy numbers (TFN) $\tilde{1}$, $\tilde{2}$, …, $\tilde{9}$ (called TFNs of type I) and the second ones are corresponding reciprocals of the TFNs of type I, which are $\widetilde{\frac{1}{9}}$, $\widetilde{\frac{1}{8}}$, …, $\widetilde{\frac{1}{2}}$, $\tilde{1}$ (called TFNs of type II), Rezaei et al. (2013). Rezaei et al. (2013) noted that TFN is linearly increasing over the interval (l_{ij}, m_{ij}) and linearly decreasing over interval (m_{ij}, u_{ij}), while the reciprocal of TFN is not linearly changing over its left and right intervals. They proposed the correction of Mikhailov's (2003) method which has not considered this drawback. Whereas the LFPP method is also based on the Mikhailov's (2003) fuzzy preference programming method, the nonlinearity of the fuzzy reciprocal numbers has not been considered, as well. Therefore, we followed the logic proposed by Rezaei et al. (2013), and improved LFPP, which leads to the corrected results. The improved LFPP is as follows:

$$\min J = (1-\lambda)^2 + M\sum_{i=1}^{n-1}\sum_{j=i+1}^{n}\left(\delta_{ij}^* 2 + \eta_{ij}^* 2\right) \tag{11}$$

Subject to

$$\begin{cases} x_i - x_j - \lambda \ln\left(\dfrac{m_{ij}}{l_{ij}}\right) + \delta_{ij} \geq \ln l_{ij}, & i = 1, \ldots, n-1;\ j = i+1, \ldots, n \\ -x_i + x_j - \lambda \ln\left(\dfrac{u_{ij}}{m_{ij}}\right) + \eta_{ij} \geq -\ln u_{ij}, & i = 1, \ldots, n-1;\ j = i+1, \ldots, n \text{ Type I} \\ \lambda,\ x_i \geq 0, & i = 1, \ldots, n \\ \delta_{ij},\ \eta_{ij} \geq 0, & i = 1, \ldots, n-1;\ j = i+1, \ldots, n \end{cases} \tag{12}$$

$$\begin{cases} x_j - x_i - \lambda \ln\left(\dfrac{m_{ji}}{l_{ji}}\right) + \delta_{ij} \geq \ln l_{ji}, & i = 1, \ldots, n-1;\ j = i+1, \ldots, n \\ -x_j + x_i - \lambda \ln\left(\dfrac{u_{ji}}{m_{ji}}\right) + \eta_{ij} \geq -\ln u_{ji}, & i = 1, \ldots, n-1;\ j = i+1, \ldots, n \quad \text{Type II} \\ \lambda,\ x_i \geq 0, & i = 1, \ldots, n \\ \delta_{ij},\ \eta_{ij} \geq 0, & i = 1, \ldots, n-1;\ j = i+1, \ldots, n \end{cases} \tag{13}$$

Solving the nonlinear programming problem previously described by (11)–(13) leads to the optimal priority vector w^* and λ^*, where λ^* is interpreted as consistency index.

In the next section we describe our approach and apply FAHP, LFPP and improved LFPP to the aircraft type selection problem.

4. Proposed approach to the problem

Our approach to the problem of aircraft type selection can be

Fig. 1. Aircraft type selection process.

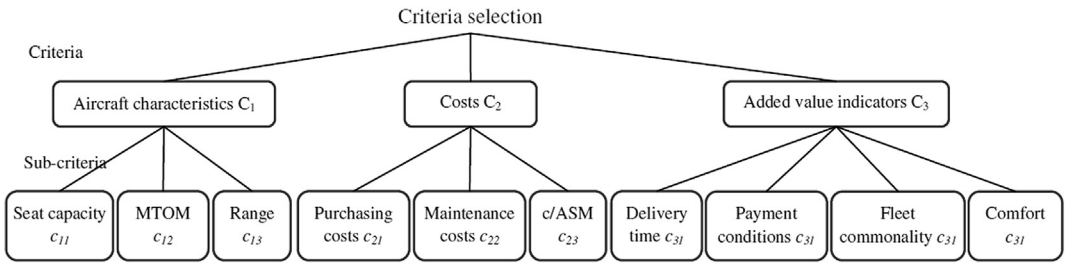

Fig. 2. Criteria and sub-criteria proposed.

illustrated by Fig. 1. At the beginning, appropriate criteria should be defined to reach the final goal, i.e. to select the most suitable alternative (aircraft type) from the defined finite set of alternatives. Once criteria have been selected and the set of alternative has been defined, fuzzy pairwise comparison matrices should be designed. For that purpose, we created interviews and asked the employees from different airlines and universities to give their expert opinions and contribute to the design of the fuzzy pairwise comparison matrices. Moreover, this would enable application of the FAHP, and further enable making a decision as to which aircraft type is the most appropriate choice.

The following sub-sections explain the criteria selection, definition of the set of alternatives and fuzzy pairwise comparison matrices design in particular. In Section 5 the FAHP for the regional airline case study is applied.

4.1. Criteria selection

The first goal is to analyse and identify the most relevant criteria/sub-criteria for aircraft type selection. Depending on aircraft purpose and its mission (training or commercial aircraft for charter, low cost, regional or full service airline) different criteria/sub-criteria were discussed in the literature as shown in Table 1.

Considering the above literature, the three criteria and ten sub-criteria are proposed to reflect airlines' as well as some of passengers' perspectives. The proposed criteria and sub-criteria are presented in Fig. 2 and described below in detail.

Aircraft characteristics (C_1) is the criterion divided into three sub-criteria:

Aircraft seat capacity (c_{11}) reflects a measure of matching demand and capacity. The smaller the gap between capacity and forecasted demand is, the greater load factor is. Greater load factor is closely connected to greater profitability.

MTOM – Maximal Take-Off Mass (c_{12}) is the main unit for calculation of airport and navigation fees (measured in tonnes).

Aircraft range (c_{13}) defines the aircraft ability to fly a certain distance without refuelling (measured in nautical miles). Depending on the aircraft range, the set of airports that can be served from the base airport is determined.

The *Costs* (C_2) criterion is measured in monetary units. This criterion consists of three types of costs:

Purchasing cost (c_{21}) describes the needed investment. They are measured in US dollars.

Maintenance costs (c_{22}) are expressed as unit maintenance costs in cents per ASM.

CASM (c_{23}) represents total cost per available seat miles indicating operational costs and aircraft performances. They are measured in cents per ASM.

It is noticeable that criteria of aircraft characteristics (C_1) and costs (C_2) are criteria examined by many researchers and they may be considered as mandatory criteria. The qualitative criteria are less considered for solving aircraft type selection problem. On the other hand, recent research and analysis (Yang et al., 2012; Hussain et al., 2015) show that some of qualitative criteria have direct impact on passengers' loyalty and indirect on passenger demand. For that reason we propose a set of qualitative criteria (named *Added value indicators*) defined in a specific way, involving qualitative interests of both passengers and airlines.

Added value indicators (C_3) criterion is not easy to assess quantitatively, but these indicators evidently contribute to the value of airline product and the level of service. Therefore, they are expressed qualitatively, by words. This criterion encompasses both airline's and passengers' perspective.

Delivery time (c_{31}) represents the time when an aircraft can be delivered from a manufacturer or lessor to the airline. It is very important that an airline is equipped with the required resources at the right time in order to accomplish its mission in the air market. The time could be described as less or more acceptable.

Payment conditions (c_{32}) describe payment advantages offered by different manufacturers or leasing companies, which could influence aircraft selection. These conditions could involve some political issues that might by the most influential factors in the decision making. Payment conditions could be graded from poor to very good.

Fleet commonality (c_{33}) is a concept[1] introduced in order to enable an airline to minimise the number of types in the fleet and to adjust the fleet to route network at the same time. The concept implies that an airline has a family of airframe

[1] The definition of fleet commonality concept is given according to Holloway (2008).

derivatives and/or engine derivatives in its fleet. This brings advantages related to fleet flexibility in training and rostering of aircrew and maintenance personnel (reduction of training costs and number of pilots), and also flexibility in spares and other equipment (single pool of spares and equipment for the aircraft family). This sub-criterion could be expressed qualitatively, by words graded from low to high level of commonality.

Comfort (c_{34}) is the indicator that reflects passengers' aspects. It is understood in the widest sense and it indicates the way how the passengers evaluate the space in the passenger cabin. Newer aircraft are more attractive to passengers in comparison to older ones. Hence, newer aircraft could induce demand on routes they operate on. This sub-criterion could be described qualitatively, by words graded from low to high level of comfort. The higher the level of comfort, the more satisfied the passenger is. Satisfied passengers would have greater preference to choose the airline and would be loyal to the airline. Besides, previous research and survey indicate that service quality that encompasses comfort has a positive impact on customer value, airline image and behavioural intentions (Yang et al., 2012). Although the research (Yang et al., 2012) relates to low cost carriers, it is expected that passengers value service quality even more in the case of airlines that are not low cost because they spend more money. Service quality also has a direct impact on perceived value and customer satisfaction (Hussain et al., 2015). Economic efficiency and customer satisfaction are influenced by suitable fleet management (Žak et al., 2011).

Sub-criteria, which we believe are very important, and have not considered by other researchers, are *Payment conditions* and *Fleet commonality*. These sub-criteria must be observed because of their possible strong influence on final decision.

Considering criteria/sub-criteria proposed in this paper, it can be seen that we cover technical/technological, economic, passengers' and other aspects. The environmental aspects are not included in this research due to the fact that newer generations of aircraft are produced as environmental friendly and cover these aspects by itself.

4.2. Defining the set of alternatives

A set of alternatives cannot be determined in advance, independently of the specific case. There are many aircraft types that could operate different routes. A finite set of alternatives should be created based on historical data related to the aircraft used on the route network. The data demonstrate the inside knowledge and experience from different airlines.

We assume that the route network is divided into sets consisting of routes with similar characteristics, which could be operated by the same fleet (Dožić and Kalić, 2015a). Similar characteristics of routes indicate that they have uniform forecasted passengers per flight, which refers to similar aircraft capacity that could match the demand. Routes distances are comparable, which is important for the aircraft range. The set involves all aircraft types flying on the routes until nowadays that are still in production as well as new ones that will replace aircraft types out of production. Therefore, there are no constraints related to range or take-off and landing field length (the airports have appropriate infrastructure) and the additional consideration of aircraft performances is not necessary.

Table 3
Fuzzy pairwise comparison matrix of selection criteria C_i with respect to the decision goal.

	C_1	C_2	C_3
C_1	(1, 1, 1)	(2/7, 1/3, 2/5)	(1/3, 2/5, 1/2)
C_2	(5/2, 3, 7/2)	(1, 1, 1)	(1/2, 1, 3/2)
C_3	(2, 5/2, 3)	(2/3, 1, 2)	1

Table 4
Fuzzy pairwise comparison matrix of the three sub-criteria of aircraft characteristics C_1.

	c_{11}	c_{12}	c_{13}
c_{11}	(1, 1, 1)	(1, 3/2, 2)	(2, 5/2, 3)
c_{12}	(1/2, 2/3, 1)	(1, 1, 1)	(2, 5/2, 3)
c_{13}	(1/3, 2/5, 1/2)	(1/3, 2/5, 1/2)	(1, 1, 1)

Table 5
Fuzzy pairwise comparison matrix of the three sub-criteria of costs C_2.

	c_{21}	c_{22}	c_{23}
c_{21}	(1, 1, 1)	(3/2, 2, 5/2)	(1, 3/2, 2)
c_{22}	(2/5, 1/2, 2/3)	(1, 1, 1)	(1/2, 1, 3/2)
c_{23}	(1/2, 2/3, 1)	(2/3, 1, 2)	(1, 1, 1)

Table 6
Fuzzy pairwise comparison matrix of the four sub-criteria of added value indicators C_3.

	c_{31}	c_{32}	c_{33}	c_{34}
c_{31}	(1, 1, 1)	(1, 3/2, 2)	(1/2, 1, 3/2)	(3/2, 2, 5/2)
c_{32}	(1/2, 2/3, 1)	(1, 1, 1)	(2/5, 1/2, 2/3)	(3/2, 2, 5/2)
c_{33}	(2/3, 1, 2)	(3/2, 2, 5/2)	(1, 1, 1)	(5/2, 3, 7/2)
c_{34}	(2/5, 1/2, 2/3)	(2/5, 1/2, 2/3)	(2/7, 1/3, 2/5)	(1, 1, 1)

4.3. Fuzzy pairwise comparison matrices design

In order to overcome non-determinism connected with design of fuzzy pairwise comparison matrices, we designed an interview (consisting of five questions). We asked the experts to rate the importance of selected criteria/sub-criteria over each other according to the linguistic scale shown in Table 2. The experts are employed in different airlines as well as at technical universities and are familiar with the problem considered.

To provide fuzzy judgements for four fuzzy pairwise comparison matrices, we processed responses to all questions. After reviewing collected data, some interviews were rejected due to their respective inconsistency. The average values were calculated from the rest of the data, and transformed into the closest fuzzy values (Tables 3–6).

In the first question, the experts rated the importance of criterion C_i over criterion C_j for each i and j ($i \neq j$), i.e. compared the aircraft characteristics, costs and added value indicators importance over each other. Fuzzy pairwise comparison matrix shown in Table 3 results from the analysis of answers to this question.

In the next three interview questions, the experts estimated the importance of sub-criterion c_{ik} over sub-criterion c_{ip} for each i ($k \neq p$). In the second question, they compared the three sub-criteria of aircraft characteristics (seat capacity, MTOM and range) over each other, assuming that the passenger demand by routes is known, as well as route network. Fuzzy pairwise comparison matrix shown in Table 4 results from the analysis of answers to this question. In the third question, the experts compared the three sub-criteria of costs (purchasing, maintenance and CASM) to each other. Again, the answers were examined and the fuzzy pairwise comparison matrix of the three sub-criteria of costs was created as shown in Table 5. The fourth question was related to comparison of the four sub-criteria of the added value indicators' (delivery time,

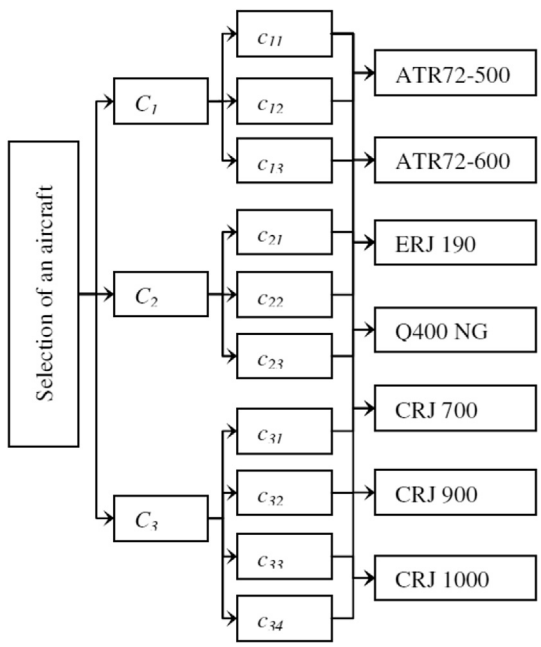

Fig. 3. Hierarchical structure of aircraft type selection problem.

payment conditions, fleet commonality and service quality) importance over each other. Interpretation of answers to this question provided the fuzzy pairwise comparison matrix shown in Table 6.

In the last question, the experts were asked to state any other criteria that were, in their opinion, high in quality and beneficial for aircraft type selection. Their answers confirmed criteria and sub-criteria proposed in sub-section 4.1.

As already pointed out, fuzzy pairwise comparison matrices of alternatives (aircraft types) with respect to sub-criteria c_{ij} (for each i and j) depend on specific data rather than on experience and should be created for each particular case.

In the next section, we will illustrate our approach on the regional airline case study.

5. Application and results: regional airline case study

In order to apply LFPP-based nonlinear priority method and improved LFPP method for the FAHP weight derivation on the aircraft type selection problem, a regional airline operating from Belgrade Airport is chosen. The airline's route network consists of 27 routes. The input data are taken from Dožić and Kalić (2015a). The focus of this research is on the set covered by small aircraft with capacity up to 100 seats (consisting of eight routes from Belgrade to Sarajevo, Podgorica, Tivat, Ljubljana, Vienna, Skopje, Thessalonica and Prague).

The area of 800 km radius from Belgrade represents the market which should be served by small aircraft. In the past, a dense network with strong passenger flows covered this area (former Yugoslavia and the neighbourhood). Air traffic was recovered with a tendency to reconnect Serbia with the neighbouring countries. Therefore, the selection of routes mentioned above is reasonable. The following characteristics are common for selected routes: short distance (up to 800 km); historical, cultural and ethnical connections (Sarajevo, Podgorica, Tivat, Ljubljana and Skopje); summer resorts and tourist centres (Tivat, Skopje, Thessalonica and Prague); similar predicted number of passengers per flight that corresponds in capacity to small aircraft (Dožić and Kalić, 2015a).

By analysing historical data related to aircraft types flying on considered routes, the following set of alternatives is selected: regional jets Embraer 190 (ERJ190), CRJ 700, CRJ 900 and CRJ 1000, as well as turboprops ATR 72–500, ATR 72–600 and Bombardier Q400 NG.

Finally, the hierarchy structure of the problem is shown in Fig. 3.

By applying LFPP and improved LFPP method to the data from Table 3 in (Subsection 4.3), the equal LFPP priorities for criteria C_1, C_2 and C_3 are obtained from both LFPP and improved LFPP. The noticeable fact is that the highest LFPP priority is given to the criterion of costs, with nearly 44% of the influence.

The optimal solution of the model (defined by (9) and (10) in Section 3, and by (11)–(13) in Subsection 3.1) is obtained by using the Microsoft Excel Solver. The optimal values are:

$$x_1^* = 0.0003,\ x_2^* = 1.0556,\ x_3^* = 0.9598,$$

$$\lambda^* = 0.7644,\ \delta_{12}^* = \delta_{23}^* = 0,\ \delta_{13}^* = 0.0003,$$

$$\eta_{12}^* = 0.0003,\ \eta_{13}^* = 0,\ \eta_{23}^* = 0.0003.$$

$$w_1^* = 0.1542,\ w_2^* = 0.4431,\ w_3^* = 0.4026.$$

By taking the value of δ^* $(\delta^* = \sum_{i=1}^{n-1}\sum_{j=i+1}^{n}(\delta_{ij}^*2 + \eta_{ij}^*2) = 0)$ as an inconsistency measure and obtaining λ^* as positive numbers, it can be concluded that the matrix (Table 3) is consistent.

The priorities are calculated by using LFPP method for the fuzzy pairwise comparison matrices (Tables 4–6). Seat capacity has the highest LFPP priority ($w_{11}^* = 0.4584$) with respect to aircraft characteristics, while other priorities are $w_{12}^* = 0.3742$ and $w_{13}^* = 0.1674$. Purchasing cost has the highest LFPP priority ($w_{21}^* = 0.4633$) with respect to costs, and other priorities are $w_{22}^* = 0.2473$ and $w_{23}^* = 0.2894$. Finally, the highest LFPP priority with respect to added value indicators lies with fleet commonality ($w_{33}^* = 0.3759$) while $w_{31}^* = 0.2773$, $w_{32}^* = 0.2212$, and $w_{34}^* = 0.1256$. Improved LFPP is applied to three criteria, but the changes are observed only in added value indicators. It can be noted that the values of priorities are changed, while the ranking is unchanged. The highest improved LFPP priority with respect to added value indicators still lies with fleet commonality ($w_{33}^* = 0.3812$), than delivery time $w_{31}^* = 0.2763$, payment conditions $w_{32}^* = 0.2179$, and comfort $w_{34}^* = 0.1245$. The values of δ^* are equal to 0, while λ^* takes positive values for all fuzzy comparison matrices (Tables 4–6), therefore it can be said that there is no inconsistency.

Starting from the fuzzy pairwise comparison matrices of alternatives with respect to the sub-criteria, their LFPP priorities are obtained and given in Table 7. The seat capacity (c_{11}) matches a more or less expected number of passengers per flight, which is assumed to be known. The more the aircraft capacity meets demand, the better ranking the aircraft has. MTOM (c_{12}) is desired to be smaller, as well as all types of costs (c_{21}, c_{22}, and c_{23}). Aircraft range (c_{13}) should be appropriate to the route distances.

Note that the pairwise comparisons of the alternatives with respect to the sub-criteria of added value indicators (c_{31}, c_{32}, c_{33}, and c_{34}) are assumed. Pairwise comparisons of the sub-criteria of delivery time (c_{31}) and payment conditions (c_{32}) could be known only when aircraft acquisition procedure starts. Bearing in mind that the regional airline is used to illustrate the approach proposed, data related to c_{33} and c_{34} could not be known. Hence, all these data should be assumed.

According to values of δ^* and λ^* created fuzzy pairwise comparison matrices of alternatives with respect to different sub-

Table 7
Aggregation of the local priorities and improved priorities.

	c_{11}	c_{12}	c_{13}		Local LFPP priorities	Local improved LFPP priorities
Local priorities of selected alternatives with respect to C_1						
ATR 72-500	0.1921	0.2129	0.0879		0,1825	0.1874
ATR 72-600	0.1921	0.2471	0.0879		**0,1953**	**0.2001**
ERJ 190	0.0740	0.0750	0.2461		0,1032	0.1068
Q400 NG	0.1394	0.1663	0.1471		0,1508	0.1550
CRJ 700	0.2219	0.1138	0.1471		0,1689	0.1491
CRJ 900	0.1014	0.0924	0.1262		0,1022	0.1031
CRJ 1000	0.0791	0.0924	0.1577		0,0972	0.0985
	c_{21}	c_{22}	c_{23}		Local LFPP priorities	Local improved LFPP priorities
Local priorities of selected alternatives with respect to C_2						
ATR 72-500	0.2045	0.0920	0.1035		0,1474	0.1500
ATR 72-600	0.2045	0.0920	0.1035		0,1474	0.1500
ERJ 190	0.0947	0.1725	0.1482		0,1294	0.1337
Q400 NG	0.1567	0.1260	0.1482		0,1466	0.1425
CRJ 700	0.1567	0.1725	0.0722		0,1362	0.1305
CRJ 900	0.0947	0.1725	0.2122		**0,1479**	**0.1519**
CRJ 1000	0.0883	0.1725	0.2122		0,1450	0.1414
	c_{31}	c_{32}	c_{33}	c_{34}	Local LFPP priorities	Local improved LFPP priorities
Local priorities of selected alternatives with respect to C_3						
ATR 72-500	0.0845	0.2143	0.1355	0.1010	0,1344	0.1277
ATR 72-600	0.1597	0.2143	0.1355	0.0733	0,1518	0.1570
ERJ 190	0.1161	0.0825	0.0716	0.1536	0,0967	0.0965
Q400 NG	0.2196	0.1554	0.0985	0.1011	0,1450	0.1420
CRJ 700	0.2196	0.1130	0.1863	0.1903	**0,1798**	**0.1770**
CRJ 900	0.1161	0.1137	0.1863	0.1903	0,1513	0.1485
CRJ 1000	0.0845	0.1068	0.1863	0.1903	0,1410	0.1513
	C_1	C_2	C_3		Global LFPP priorities	Global improved LFPP priorities
Global priorities of selected alternatives with respect to the decision goal						
ATR 72-500	0,0281	0,0653	0,0541		0,1476	0.1468
ATR 72–600	0,0301	0,0653	0,0611		0,1566	**0.1605**
ERJ 190	0,0159	0,0573	0,0389		0,1122	0.1146
Q400 NG	0,0233	0,0650	0,0584		0,1466	0.1442
CRJ 700	0,0261	0,0603	0,0724		**0,1588**	0.1521
CRJ 900	0,0158	0,0656	0,0609		0,1422	0.1430
CRJ 1000	0,0150	0,0642	0,0568		0,1360	0.1388

criteria are consistent. It can be seen that aircraft CRJ 700 has the highest LFPP priority with respect to sub-criteria c_{11}, c_{22}, c_{31}, c_{33} and c_{34}, aircraft CRJ 900 has the highest LFPP priority with respect to sub-criteria c_{22}, c_{23}, c_{33} and c_{34}, aircraft CRJ 1000 has the highest LFPP priority with respect to sub-criteria c_{22}, c_{23}, c_{31}, c_{33} and c_{34}, while, Q400NG has the highest LFPP priority with respect to sub-criterion c_{31}. ATR 72–500 and ATR 72–600 are top ranked with respect to sub-criteria c_{21} and c_{32}, while the ATR 72–600 is top-ranked with respect to sub-criterion c_{12}. Aircraft ERJ 190 twice emerges as the most acceptable alternative, with respect to sub-criteria c_{13} and c_{22}.

Local priorities are aggregated into global priorities in Table 7. The table shows that highest local priority with respect to aircraft characteristics (C_1) is given to aircraft ATR 72–600 (bold values in Table 7). As to comparison of aircraft with respect to costs, the highest local priority is given to CRJ 900 (bold values in Table 7). The last criterion – added value indicators, points out that according to this criterion, CRJ 700 has the highest local priority (bold values in Table 7).

By applying the FAHP to the problem considered, a solution shown in Table 7 is arrived at. According to LFPP method for the FAHP priority derivation, the most suitable aircraft for the regional airline is an aircraft CRJ 700 (bold values in Table 7). The overall order of aircraft is: CRJ 700, ATR 72–600, ATR 72–500, Q400 NG, CRJ 900, CRJ 1000, and ERJ 190. According to our improved LFPP method, the final ranking differs. Namely, the aircraft CRJ 700 and ATR 72–600, which have, according to the LFPP method, similar global priorities (0.1588 and 0.1566, respectively) switch their positions in the final ranking. The improved LFPP method suggests regional turbo-prop aircraft ATR 72–600 as the most suitable aircraft (bold values in Table 7), which is in accordance with the previous researches (Dožić and Kalić, 2014, 2015a, 2015b).

6. Conclusions and future work

Decision related to aircraft type selection is a decision of strategic importance for any airline. If an aircraft is chosen properly, supply expressed through aircraft capacity and demand would be matched, which would further have a direct impact on the increase of airline's profitability and reduction of an airline's costs. However, appropriate aircraft type selection is necessary, but not sufficient condition for successful airline business. With the fleet selected according to the airline's requirements and with convenient airline policy and depending on the competition on the market, airlines could have an opportunity to make a profit and build a strong position in the airline market.

A new, systematic and automated-oriented approach to an aircraft type selection is proposed in this paper. Aircraft type selection is a complex problem, the solution to which depends on uncertain and approximate values of input parameters. We investigated and analysed the criteria that have (and may have) impact on this selection. The data for our research was collected by analysing the literature as well as from expert knowledge (interviews with experts from different airlines and technical universities).

In order to reach the correct decision and take into account both passengers' and airlines' interests (which are usually opposing), the three criteria and the ten sub-criteria are proposed and

systematically grouped in this paper, considering quantitative as well as qualitative aspects.

Data analysis also revealed that criteria of aircraft characteristic and costs can be considered as mandatory criteria in the process of aircraft type selection. The noticeable issue is the highest priority is given to the criterion of costs.

The contributions of our research can be summarized as follows:

1. The FAHP method has proved to be very useful in solving a variety of choice problems. Whereas this method has not been employed to the aircraft type selection problem yet, we have shown its applicability in this field.
2. We analysed relevant, available literature and identified the selection criteria.
3. We defined the set of criteria and sub-criteria in the way that encompasses both airline's and passengers' perspective (sub-criteria of comfort). With regards to cited literature, we found out that sub-criteria of payment conditions and fleet commonality have not considered by other researchers. We believe that proposed criteria and sub-criteria are the most relevant (which is verified by experts from the airline industry) and cover the widest aspects in comparison to the available literature.
4. Our approach comprises the experts' knowledge with the FAHP method and the LFPP method for choosing appropriate aircraft type to operate a defined set of routes. We also proposed an improvement of the LFPP method, which corrected the solution obtained. Valuable inside knowledge and practical experiences of airline experts has been incorporated into the methodology and projected into the FAHP pairwise comparison matrices, enabling one to produce meaningful results.
5. Since the FAHP usage has an important role in multi-criteria decision making under uncertainty and its application is extensive in a wide variety of areas, this paper shows that the FAHP can be successfully used as a support tool in decision making processes related to the aircraft type selection problem, regarding criteria defined in this research.
6. The proposed approach can be formalised and utilized by means of an automated assistant and so our work can be seen as a contribution to a library of automatic support tools for the airline's decision system.

The process of making strategic decisions such as aircraft selection involves people with different points of view and from different department in airlines. It should be noted that MCDM includes a certain level of subjectivity and decisions could be influenced on decision maker experience and its educational background. In that sense, fuzzy pairwise comparison matrices in FAHP could be influenced by experience of decision maker. However, the solutions obtained by applying FAHP and LFPP/improved LFPP refer to presented example and maybe would be changed in different one. It could depend on the airline policy (goals and priorities that could influence alternatives and criteria selection, as well as criteria/sub-criteria pairwise comparisons) and people involved in the process of decision making.

Allowing decision maker to design pairwise comparison matrices according to his knowledge and awareness of current and potential future situation on the market, the proposed approach could suggest suitable type of aircraft for different “if-then” scenarios based on different assumptions (for example if passenger demand changes, or if network expands, etc.).

The great advantage of the approach proposed in this paper is its applicability to air cargo fleet, with minor changes in the set of sub-criteria recommended. The minor changes include: replacement of the two sub-criteria of seat capacity and comfort with the corresponding sub-criteria, while remaining sub-criteria remain the same. Our approach could, also, be employed for solving similar problems in any other modes of transport, with the same set of the three criteria proposed and corresponding adjustment of the set of sub-criteria according to characteristics of the transport mode in question. Bering in mind that comparison of different MCDM methods is possible only under the same conditions, our future work could go in that direction. Also, in order to encompass diversity in thinking influenced by positions in airline as well as by educational background, group decision making could be employed in the future.

Acknowledgements

This research has been supported by the Ministry of Education, Science and Technological Development, Republic of Serbia, as part of projects TR36033 (2011–2017) and TR32023 (2011–2017).

The authors would like to thank all participants in the interviews who provided data valuable for this research.

References

Bharda, D., 2003. Choice of Aircraft Fleets in the US NAS: Findings from a Multinomial Logit Analysis. Center for Advanced System Development (CAASD), The MITRE Corporation. Technical Papers.

Bongo, M.F., Ocampo, L.A., 2017. A hybrid fuzzy MCDM approach for mitigating airport congestion: a case in ninoy aquino international airport. J. Air Transp. Manag. 63, 1–16. http://dx.doi.org/10.1016/j.jairtraman.2017.05.004.

Bruno, G., Esposito, E., Genovese, A., 2015. A model for aircraft evaluation to support strategic decisions. Expert Syst. Appl. 42, 5580–5590. http://dx.doi.org/10.1016/j.eswa.2015.02.054.

Buckley, J.J., 1985. Fuzzy hierarchical analysis. Fuzzy Set. Syst. 17 (3), 233–247.

Chang, D.Y., 1996. Applications of the extent analysis method on fuzzy AHP. Eur. J. Oper. Res. 95 (3), 649–655.

Chen, I.S., 2016. A combined MCDM model based on DEMATEL and ANP for the selection of airline service quality improvement criteria: a study based on the Taiwanese airline industry. J. Air Transp. Manag. 57, 7–18. http://dx.doi.org/10.1016/j.jairtraman.2016.07.004.

Chen, J.C., Lin, S.C., Yu, V.F., 2017. Structuring an effective human error intervention strategy selection model for commercial aviation. J. Air Transp. Manag. 60, 65–75. http://dx.doi.org/10.1016/j.jairtraman.2017.01.008.

Deveci, M., Demirel, N.Ç., Ahmetoğlu, E., 2017. Airline new route selection based on interval type-2 fuzzy MCDM: a case study of new route between Turkey- North American region destinations. J. Air Transp. Manag. 59, 83–99. http://dx.doi.org/10.1016/j.jairtraman.2016.11.013.

Dožić, S., Kalić, M., 2014. An AHP approach to aircraft selection process. Transp. Res. Proc. 3, 165–174. http://dx.doi.org/10.1016/j.trpro.2014.10.102.

Dožić, S., Kalić, M., 2015a. Three stage airline fleet planning model. J. Air Transp. Manag. 46, 30–39. http://dx.doi.org/10.1016/j.jairtraman.2015.03.011.

Dožić, S., Kalić, M., 2015b. Comparison of two MCDM methodologies in aircraft type selection problem. Transp. Res. Proc. 10, 910–919. http://dx.doi.org/10.1016/j.trpro.2015.09.044.

Gomes, L.F.A.M., de Mattos Fernandes, J.E., Soares de Mello, J.C.C.B., 2012. A fuzzy stochastic approach to the multicriteria selection of an aircraft for regional chartering. J. Adv. Transp. 48 (3), 223–237. http://dx.doi.org/10.1002/atr.206.

Harasani, W.I., 2006. Evaluation and selection of a fleet of aircraft for a local airline. JKAU Eng. Sci. 17 (2), 3–16.

Harasani, W.I., 2008. Evaluation and Selection of a Fleet of Aircraft Located in Madniah, Saudi Arabia. 12th Annual World Conference Air Transport Research Society, Athens.

Holloway, S., 2008. Straight and Level: Practical Airline Economics. Ashgate, Hampshire, England, Burlington, USA.

Hussain, R., Nasser, A.A., Hussain, Y.K., 2015. Service quality and customer satisfaction of a UAE-based airline: an empirical investigation. J. Air Transp. Manag. 42, 167–175. http://dx.doi.org/10.1016/j.jairtraman.2014.10.001.

Khoo, H.L., Teoh, L.E., 2014. An optimal aircraft fleet management decision model under uncertainty. J. Adv. Transp. 48 (7), 798–820. http://dx.doi.org/10.1002/atr.1228.

Kilic, H.S., Zaim, S., Delen, D., 2014. Development of a hybrid methodology for erp system selection: the case of Turkish airlines. Decis. Support Syst. 66, 82–92. http://dx.doi.org/10.1016/j.dss.2014.06.011.

Kubler, S., Robert, J., Derigent, W., Voisin, A., Le Traon, Y., 2016. A state-of the-art survey & testbed of fuzzy AHP (FAHP) applications. Expert Syst. Appl. 65, 398–422. http://dx.doi.org/10.1016/j.eswa.2016.08.064.

Li, W., Yu, S., Pei, H., Zhao, C., Tian, B., 2017. A hybrid approach based on fuzzy AHP and 2-tuple fuzzy linguistic method for evaluation in-flight service quality. J. Air Transp. Manag. 60, 49–64. http://dx.doi.org/10.1016/j.jairtraman.2017.01.006.

Mandic, K., Delibasic, B., Knezevic, S., Benkovic, S., 2014. Analysis of the financial parameters of Serbian banks through the application of the fuzzy AHP and

ARTICLE IN PRESS

TOPSIS methods. Econ. Model 43, 30–37. http://dx.doi.org/10.1016/j.econmod.2014.07.036.
Mikhailov, L., 2003. Deriving priorities from fuzzy pairwise comparison judgments. Fuzzy Set. Syst. 134 (3), 365–385.
Ozdemir, Y., Basligil, H., Karaca, M., 2011. Aircraft selection using analytic network process: a case for Turkish airlines. In: Proceedings of the World Congress on Engineering Vol II, London, U.K. July 6–8 available at: http://www.iaeng.org/publication/WCE2011/WCE2011_pp1155-1159.pdf.
Rezaei, J., Fahim, P.B.M., Tavasszy, L., 2014. Supplier selection in the airline retail industry using a funnel methodology: conjunctive screening method and fuzzy AHP. Expert Syst. Appl. 41, 8165–8179. http://dx.doi.org/10.1016/j.eswa.2014.07.005.
Rezaei, J., Hemmes, A., Tavasszy, L., 2017. Multi-criteria decision-making for complex bundling configurations in surface transportation of air freight. J. Air Transp. Manag. 61, 95–105. http://dx.doi.org/10.1016/j.jairtraman.2016.02.006.
Rezaei, J., Ortt, R., Scholten, V., 2013. An improved fuzzy preference programming to evaluate entrepreneurship orientation. Appl. Soft Comput. J. 13, 2749–2758. http://dx.doi.org/10.1016/j.asoc.2012.11.012.
Saaty, T.L., 1980. The Analytic Hierarchy Process, Planning, Priority Setting, Resource Allocation. McGraw-Hill, New York.
See, T.K., Gurnani, A., Lewis, K., 2004. Multi-attribute decision making using hypothetical equivalents and inequivalents. J. Mech. Des. 126 (6), 950–958. http://dx.doi.org/10.1115/1.1814389.
Sun, X., Gollnick, V., Stumpf, E., 2011. Robustness consideration in multi-criteria decision making to an aircraft selection problem. J. Multi-Criteria Decis. Analysis 18, 55–64. http://dx.doi.org/10.1002/mcda.471.
Tan, R.R., Aviso, K.B., Huelgas, A.P., Promentilla, M.A.B., 2014. Fuzzy AHP approach to selection problems in process engineering involving quantitative and qualitative aspects. Process Saf. Environ. 92 (5), 467–475. http://dx.doi.org/10.1016/j.psep.2013.11.005.
Van Laarhoven, P.J.M., Pedrycz, W., 1983. A fuzzy extension of Saaty's priority theory. Fuzzy Set. Syst. 11, 199–227.
Wang, T.C., Chang, T.H., 2007. Application of TOPSIS in evaluating initial training aircraft under a fuzzy environment. Expert Syst. Appl. 33, 870–880. http://dx.doi.org/10.1016/j.eswa.2006.07.003.
Wang, Y., Jung, K.A., Yeo, G.T., Chou, C.C., 2014. Selecting a cruise port of call location using the fuzzy-AHP method: a case study in East Asia. Tour. Manage 42, 262–270. http://dx.doi.org/10.1016/j.tourman.2013.11.005.
Wang, Y.M., Chin, K.S., 2011. Fuzzy analytic hierarchy process: a logarithmic fuzzy preference programming methodology. Int. J. Approx. Reason 52 (4), 541–553. http://dx.doi.org/10.1016/j.ijar.2010.12.004.
Wang, Y.M., Elhag, T.M.S., 2006. On the normalization of interval and fuzzy weights. Fuzzy Set. Syst. 157 (18), 2456–2471. http://dx.doi.org/10.1016/j.fss.2006.06.008.
Wang, Y.M., Luo, Y., Hua, Z.S., 2008. On the extent analysis method for fuzzy AHP and its applications. Eur. J. Oper. Res. 186 (2), 735–747. http://dx.doi.org/10.1016/j.ejor.2007.01.050.
Wu, C., Zhang, X.Y., Yeh, I.C., Chen, F.Y., Bender, J., Wang, T.N., 2013. Evaluating competitiveness using fuzzy analytic hierarchy process - a case study of Chinese airlines. J. Adv. Transp. 47 (7), 619–634. http://dx.doi.org/10.1002/atr.183.
Yang, K.C., Hsieh, T.C., Li, H., Yang, C., 2012. Assessing how service quality, airline image and customer value affect the intentions of passengers regarding low cost carriers. J. Air Transp. Manag. 20, 52–53. http://dx.doi.org/10.1016/j.jairtraman.2011.12.007.
Yeh, C.H., Chang, Y.H., 2009. Modeling subjective evaluation for fuzzy group multicriteria decision making. Eur. J. Oper. Res. 194 (2), 464–473. http://dx.doi.org/10.1016/j.ejor.2007.12.029.
Žak, J., Redmer, A., Sawicki, P., 2011. Multiple objective optimization of the fleet sizing problem for road freight transportation. J. Adv. Transp. 45 (4), 321–347. http://dx.doi.org/10.1002/atr.111.
Zhü, K., 2014. Fuzzy analytic hierarchy process: fallacy of the popular methods. Eur. J. Oper. Res. 236 (1), 209–217. http://dx.doi.org/10.1016/j.ejor.2013.10.034.

Please cite this article in press as: Dožić, S., et al., Fuzzy AHP approach to passenger aircraft type selection, Journal of Air Transport Management (2017), http://dx.doi.org/10.1016/j.jairtraman.2017.08.003